REV.	DESCRIPTION	DATE	ORIGINATOR
00	INITIAL RELEASE PER DCN #D21325	04/28 1994	YMK
01	REVISED PER DCN #D21839	12/07 1994	YMK
02	REVISED PER DCN #A40879	12/19 1996	SSJ
03	REVISED PER DCN #A52513	10/11 2001	YJANG

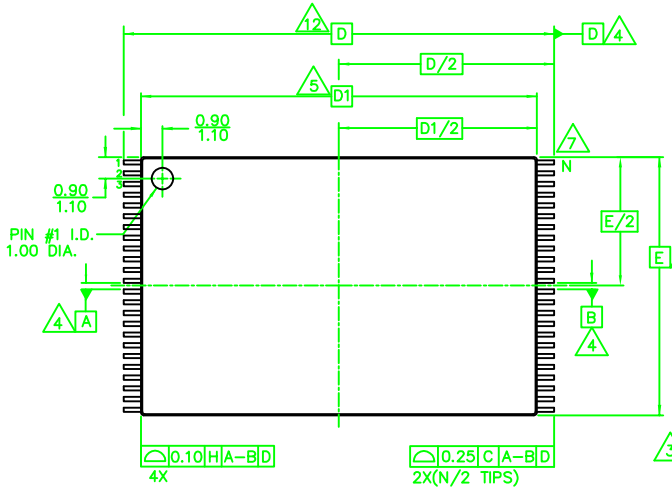

TOP VIEW

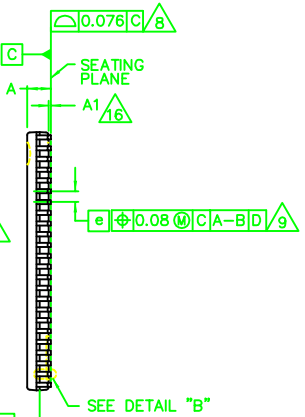

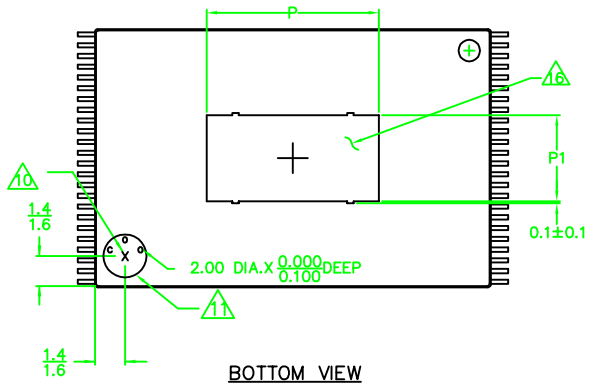

BOTTOM VIEW

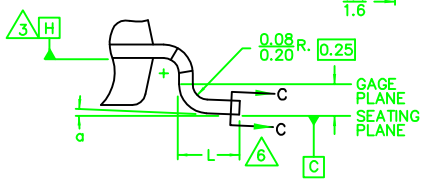

DETAIL "A"
SCALE: 25/1

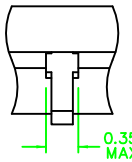

DETAIL "B"
SCALE: 25/1
DAMBAR PROTRUSION
(ROTATED 90° CW)

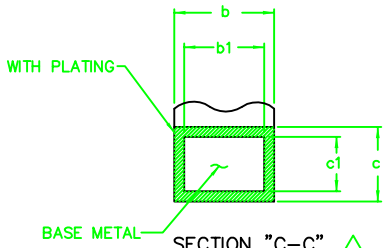

SECTION "C-C"
SCALE: 100/1

DECIMAL	ANGULAR
XX±	±
XXX±	
XXXX±	

MATERIAL

FINISH

DO NOT SCALE DRAWING

PROJECTION

APPROVALS		DATE
DRAWN	SS JANG	05/02 1996
CHECKED	JD KIM	05/02 1995
ENG'R	SS JANG	05/02 1996
RELEASED	YM KANG	12/19 1996

Anam Industrial Co., LTD. Seoul, Korea
Amkor Electronics Irving, TX
Amkor/Anam Pilipinas, INC. Manila, Philippines
Amkor Electronics Chandler, AZ

anam amkor EXCELLENCE IN SEMICONDUCTOR ASSEMBLY AND TEST

TITLE: PACKAGE OUTLINE, 48 LEAD, MATRIX, TYPE I, 12 X 20 mm TSOP(OPTIONAL ePAD)

SIZE: A3 | DWG. NO.: 35406 | REV.: 03

SCALE: 5/1 | SHEET: 1 of 2